Garden Light 25W
Model: PRO25W

Technical Data

Light source	Epistar Optics
System wattage	25W
Lumen flux	2200lm
Color temperature	Ra. 85
Color rendering index	3000K
Chromacity rate	Ra≤80
Beam angle	38D
Service lifetime	15D, 24D, TYFHYF, 50000hrs, L70
Ingress protection	IP20 installed
Operation voltage	12V AC/DC
Operation temperature	-20~400
Construction	Aluminum
WARRENTY	3 years

Ordering Data

Model	Finish	Power	CCT	CRI	CRI
25W	Black	25	3000	85	

Features

- Compact size
- 12V
- High Lumen per watt

Accessories

- Spike
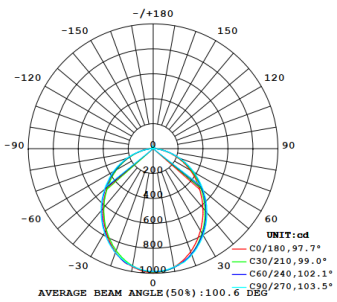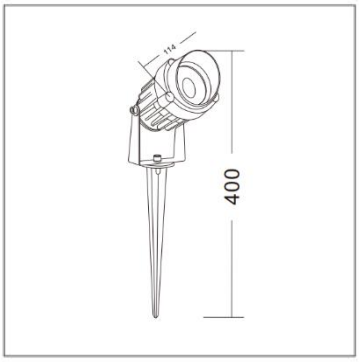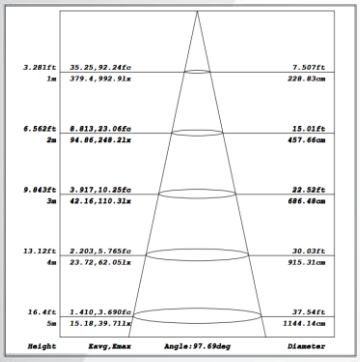
Diagram